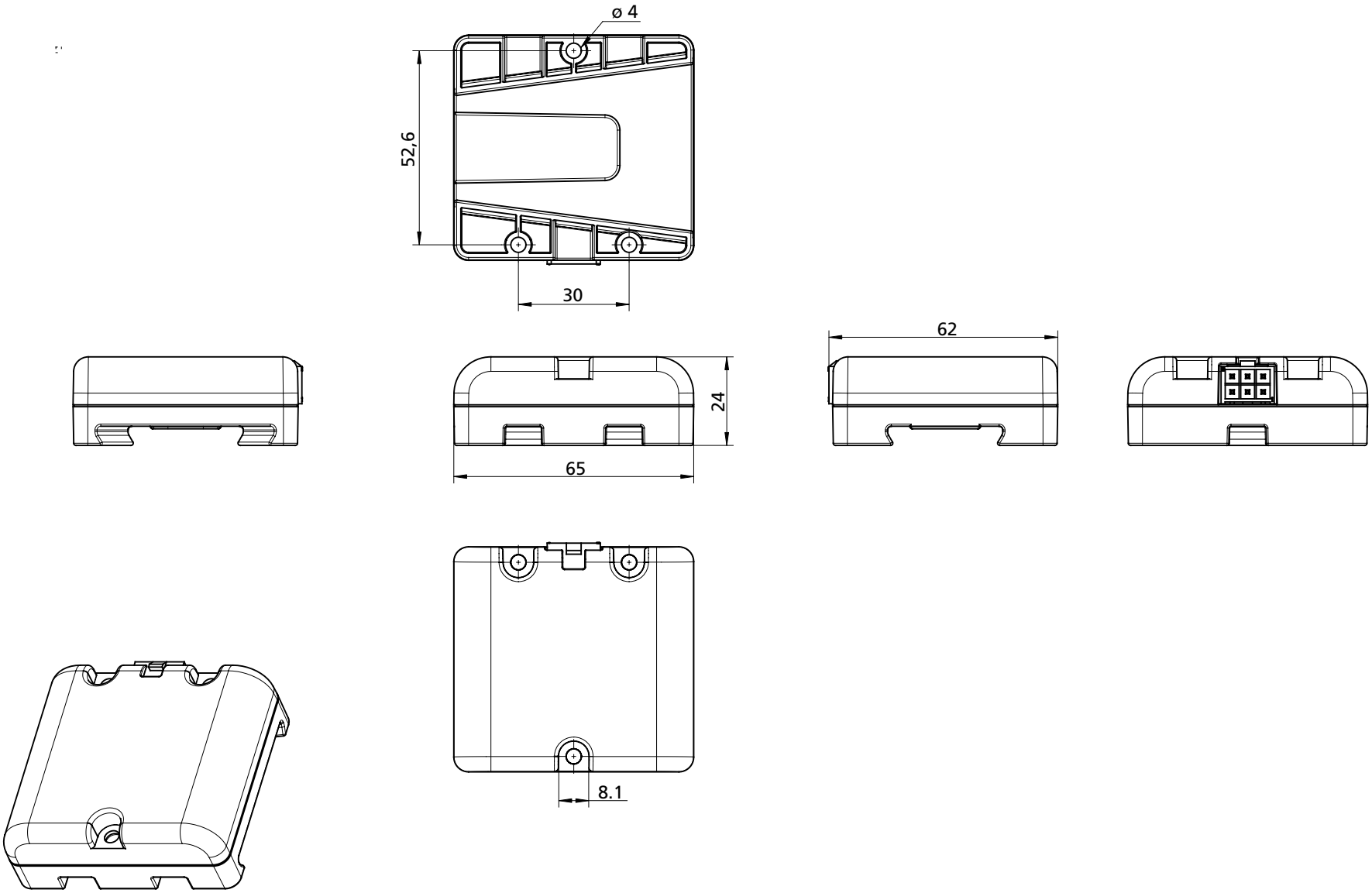

Date:
18 June 2010

Description:

Accessory DJBH

LINAK®
WE IMPROVE YOUR LIFE