Drawing No.: 1037W_DLF00016-17-18
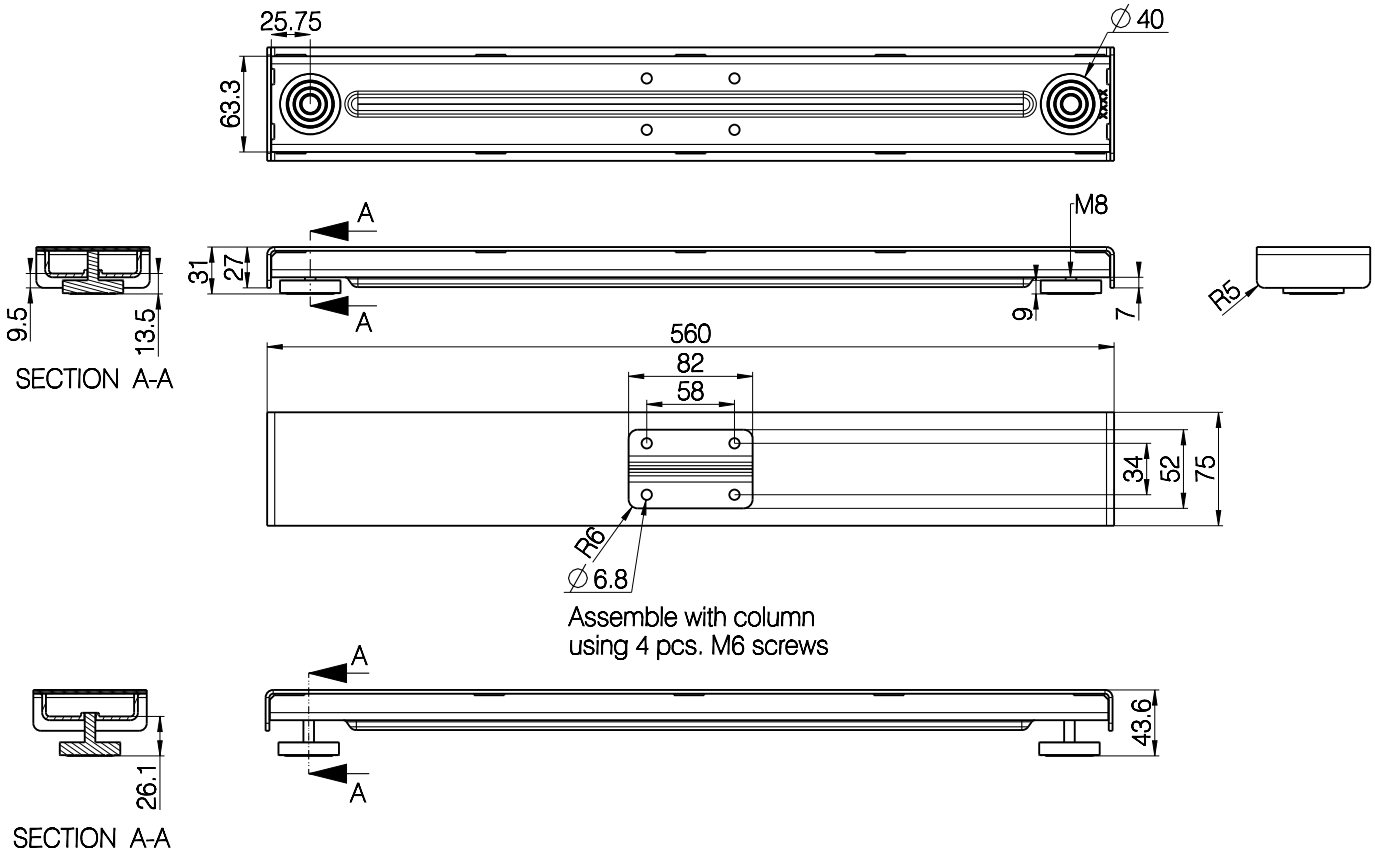
SCALE : 1:5